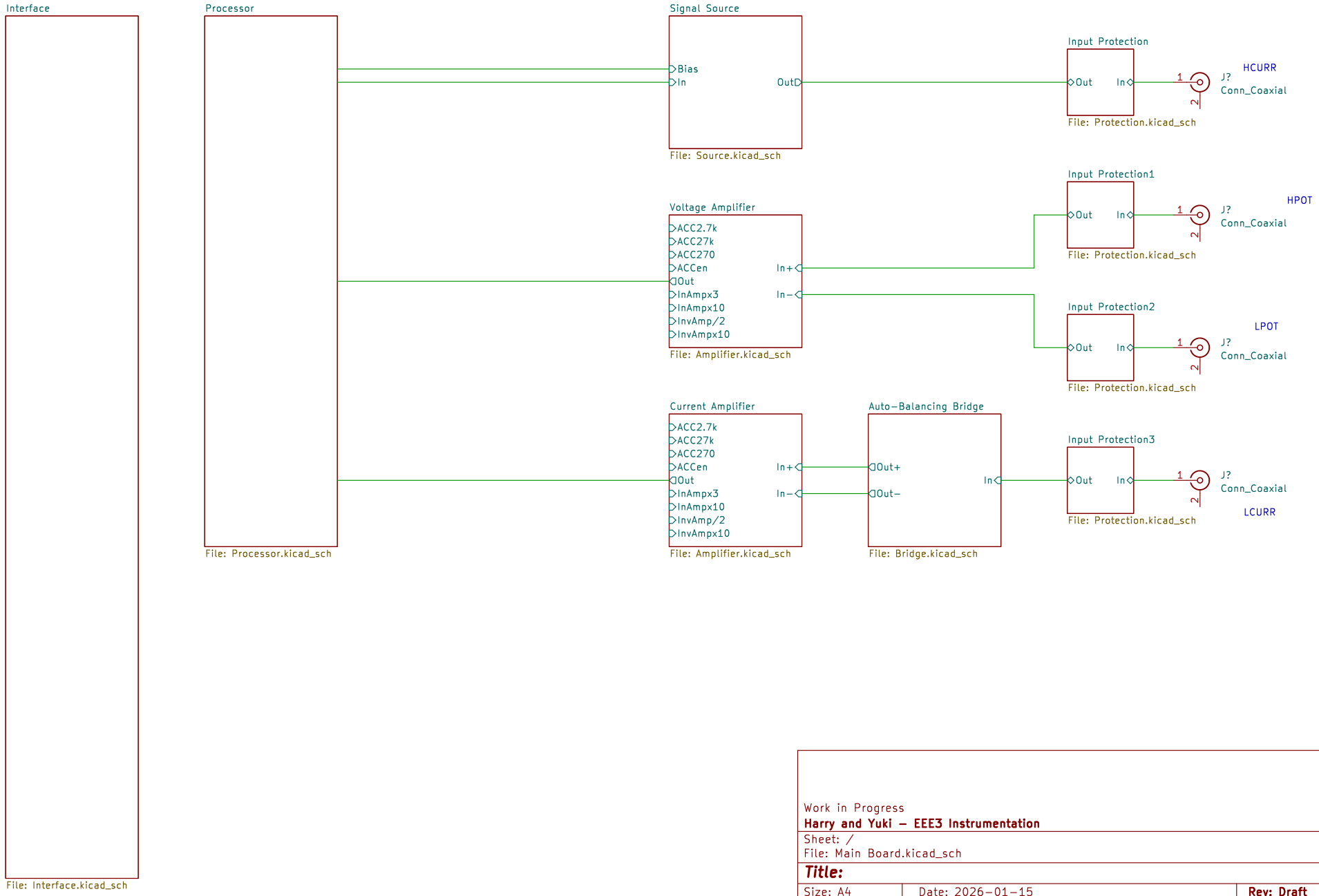

Work in Progress

Harry and Yuki – EEE3 Instrumentation

Sheet: /

File: Main Board.kicad_sch

Title:

Size: A4	Date: 2026−01−15	**Rev: Draft**
KiCad E.D.A. 9.0.7		Id: 1/11

Work in Progress

Harry and Yuki – EEE3 Instrumentation

Sheet: /Interface/

File: Interface.kicad_sch

Title:

Size: A4	Date: 2026-01-15	**Rev: Draft**
KiCad E.D.A. 9.0.7		Id: 2/11

Work in Progress

Harry and Yuki – EEE3 Instrumentation

Sheet: /Processor/

File: Processor.kicad_sch

Title:

Size: A4	Date: 2026-01-15	**Rev: Draft**
KiCad E.D.A. 9.0.7		Id: 3/11

DAC output:
1.25V RMS – 1.75VPk

Output voltage ranges
0.05 to 5V rms?

Bias
In
Out

Work in Progress
Harry and Yuki – EEE3 Instrumentation

Sheet: /Signal Source/
File: Source.kicad_sch

Title:

Size: A4	Date: 2026-01-15	**Rev: Draft**
KiCad E.D.A. 9.0.7		Id: 4/11

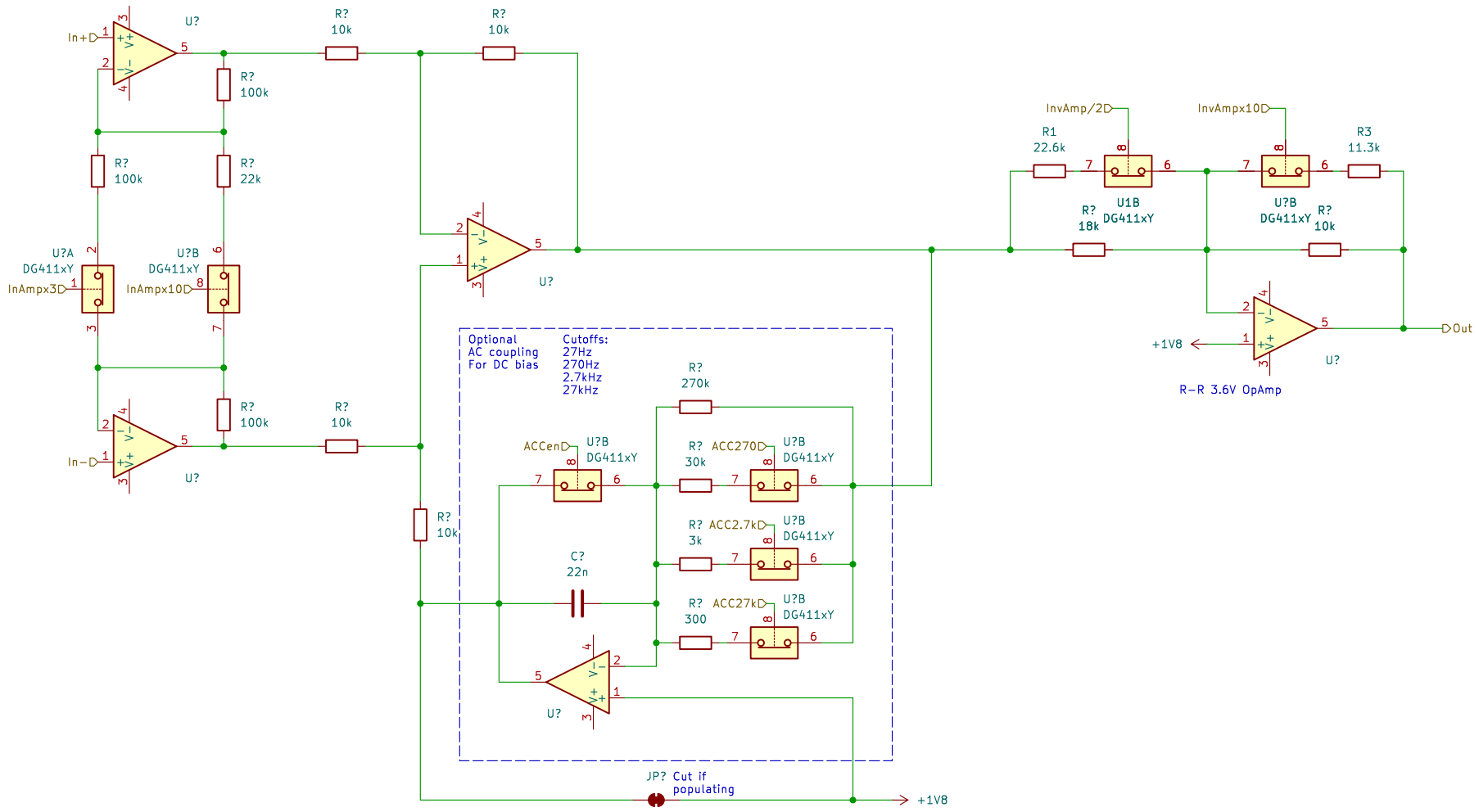

Work in Progress

Harry and Yuki – EEE3 Instrumentation

Sheet: /Voltage Amplifier/

File: Amplifier.kicad_sch

Title: Instrumentation Amplifier

Size: A4	Date: 2026-01-15	**Rev: Draft**
KiCad E.D.A. 9.0.7		Id: 5/11

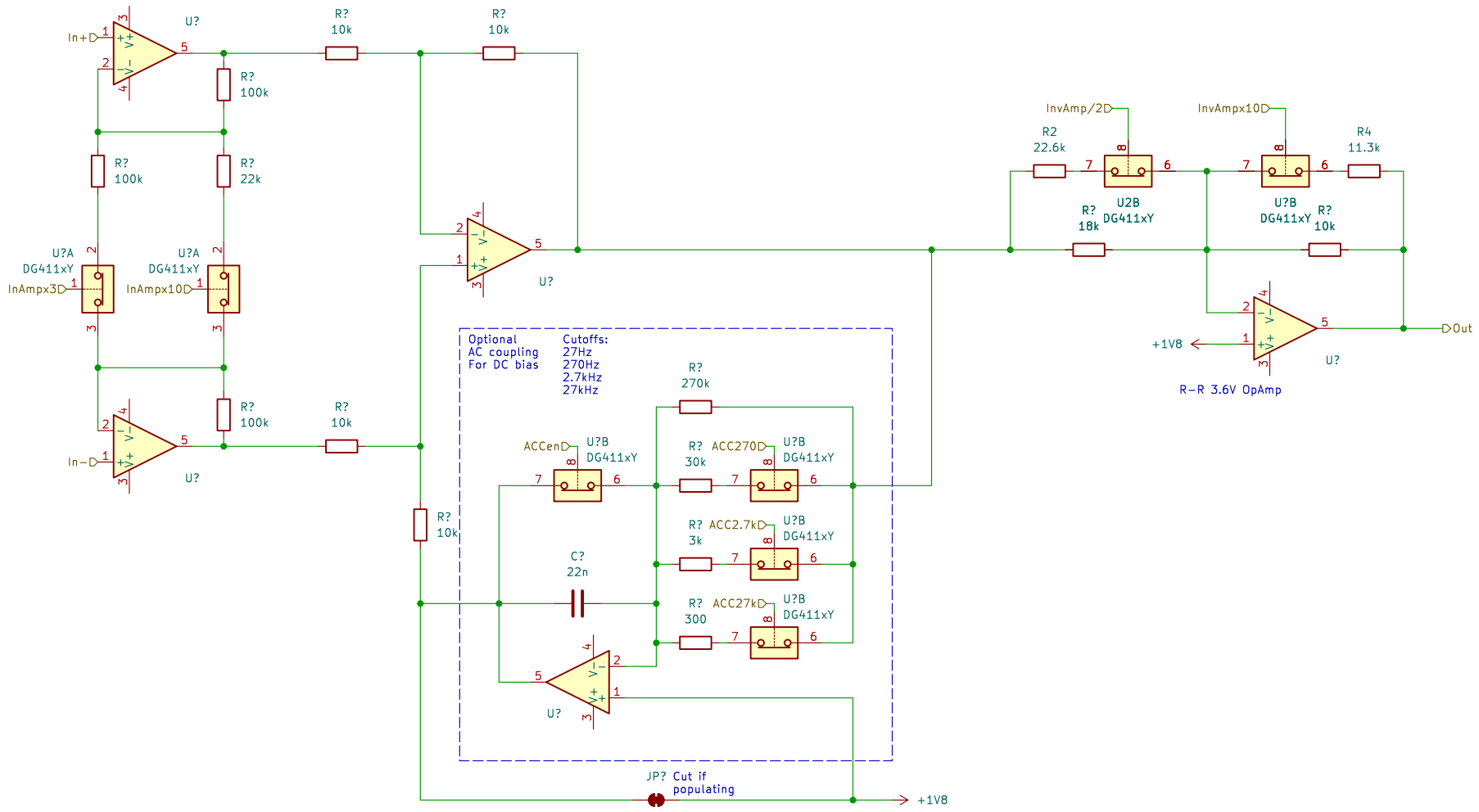

Work in Progress

Harry and Yuki – EEE3 Instrumentation

Sheet: /Current Amplifier/

File: Amplifier.kicad_sch

Title: Instrumentation Amplifier

Size: A4	Date: 2026-01-15	**Rev: Draft**
KiCad E.D.A. 9.0.7		Id: 6/11

Out+

In

Out−

Work in Progress

Harry and Yuki – EEE3 Instrumentation

Sheet: /Auto−Balancing Bridge/

File: Bridge.kicad_sch

Title:

Size: A4	Date: 2026−01−15	**Rev: Draft**
KiCad E.D.A. 9.0.7		Id: 7/11

In◇ ◇Out

Work in Progress

Harry and Yuki – EEE3 Instrumentation

Sheet: /Input Protection/
File: Protection.kicad_sch

Title:

Size: A4	Date: 2026-01-15	**Rev: Draft**
KiCad E.D.A. 9.0.7		Id: 8/11

In◇ ◇Out

Work in Progress

Harry and Yuki – EEE3 Instrumentation

Sheet: /Input Protection1/
File: Protection.kicad_sch

Title:

Size: A4	Date: 2026-01-15	**Rev: Draft**
KiCad E.D.A. 9.0.7		Id: 9/11

In◇ ◇Out

Work in Progress

Harry and Yuki – EEE3 Instrumentation

Sheet: /Input Protection2/
File: Protection.kicad_sch

Title:

Size: A4	Date: 2026-01-15	**Rev: Draft**
KiCad E.D.A. 9.0.7		Id: 10/11

In◇ ◇Out

Work in Progress

Harry and Yuki – EEE3 Instrumentation

Sheet: /Input Protection3/
File: Protection.kicad_sch

Title:

Size: A4	Date: 2026-01-15	**Rev: Draft**
KiCad E.D.A. 9.0.7		Id: 11/11